# CABINET ASSEMBLY

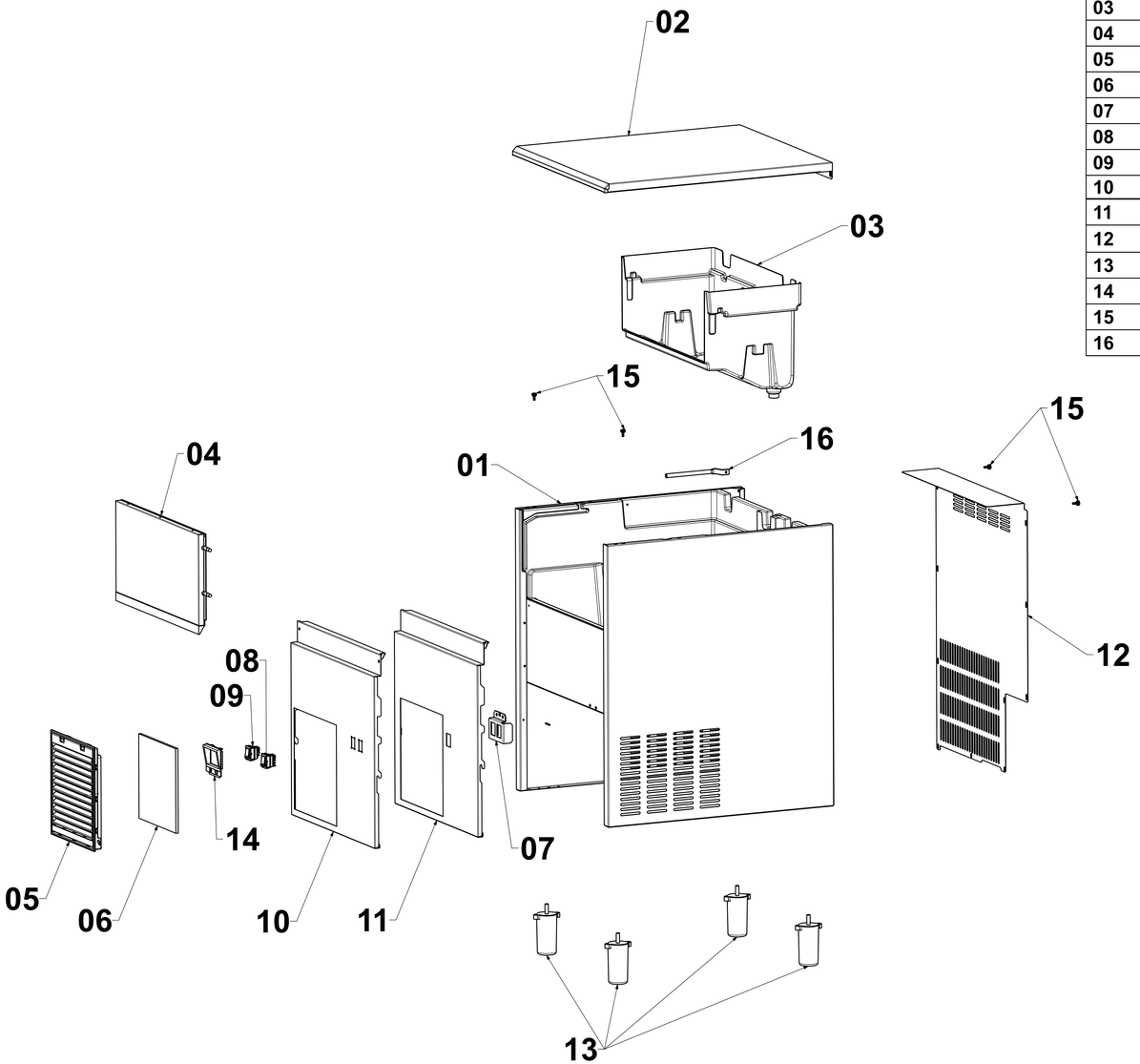


| PART NUMBER | FR25 | FR30 | FR35 | FR40 | FR50 | FR60 | FR70 | FR90 | Explanation |
|---|---|---|---|---|---|---|---|---|---|
| 01 | 5500300100 | 5501010100 | 5500030100 | 5500030100 | 5500290100 | 5500290100 | 5500400100 | 5500400100 | P.U Body Pack |
| 02 | 1101950100 | 1105250100 | 1100320100 | 1100320100 | 1100320100 | 1100320100 | 1102310100 | 1102310100 | Top Panel |
| 03 | 1102130100 | 1105310100 | 1100020100 | 1100020100 | 1101310100 | 1101310100 | 1102590100 | 1102590100 | Inner Basin |
| 04 | 5500460100 | 5501020100 | 5500040100 | 5500040100 | 5500040100 | 5500040100 | 5500470100 | 5500470100 | Door Pack |
| 05 | - | 5500130100 | 5500130100 | 5500130100 | 5500130100 | 5500130100 | 5500130100 | 5500130100 | Filter Group |
| 06 | - | 1100510100 | 1100510100 | 1100510100 | 1100510100 | 1100510100 | 1100510100 | 1100510100 | Sponge Air Filter |
| 07 | 1105380100 | 1105380100 | 1105380100 | 1105380100 | 1105380100 | 1105380100 | 1105380100 | 1105380100 | Button Holder |
| 08 | 1105950100 | 1105950100 | 1105950100 | 1105950100 | 1105950100 | 1105950100 | 1105950100 | 1105950100 | Cleaning Button |
| 09 | 1100480200 | 1100480200 | 1100480200 | 1100480200 | 1100480200 | 1100480200 | 1100480200 | 1100480200 | Power Switch |
| 10 | 1106070100 | 1106140100 | 1106080100 | 1106080100 | 1106090100 | 1106090100 | 1106100100 | 1106100100 | Front Grid Panel V1 |
| 11 | 1102020100 | 1105230100 | 1100350100 | 1100350100 | 1101380100 | 1101380100 | 1102320100 | 1102320100 | Front Grid Panel V2 |
| 12 | 1101990100 | 1105260100 | 1100300100 | 1100300100 | 1101350100 | 1101350100 | 1102330100 | 1102330100 | Rear Panel |
| 13 | 1102250100 | 1102250100 | 5500260100 | 5500260100 | 5500260100 | 5500260100 | 5500260100 | 5500260100 | Adjustable Foot |
| 14 | 1106670100 | 1106670100 | 1106670100 | 1106670100 | 1106670100 | 1106670100 | 1106670100 | 1106670100 | Button Frame |
| 15 | 1105620100 | 1105620100 | 1105620100 | 1105620100 | 1105620100 | 1105620100 | 1105620100 | 1105620100 | Top Sheet Assembly Screw |
| 16 | 1102400100 | 1102400200 | 1102400200 | 1102400200 | 1102400200 | 1102400200 | 1102400200 | 1102400200 | Bulbe-Holder Pipe |

frozy

Buz Makineleri | *Ice Makers*

*Rev02*

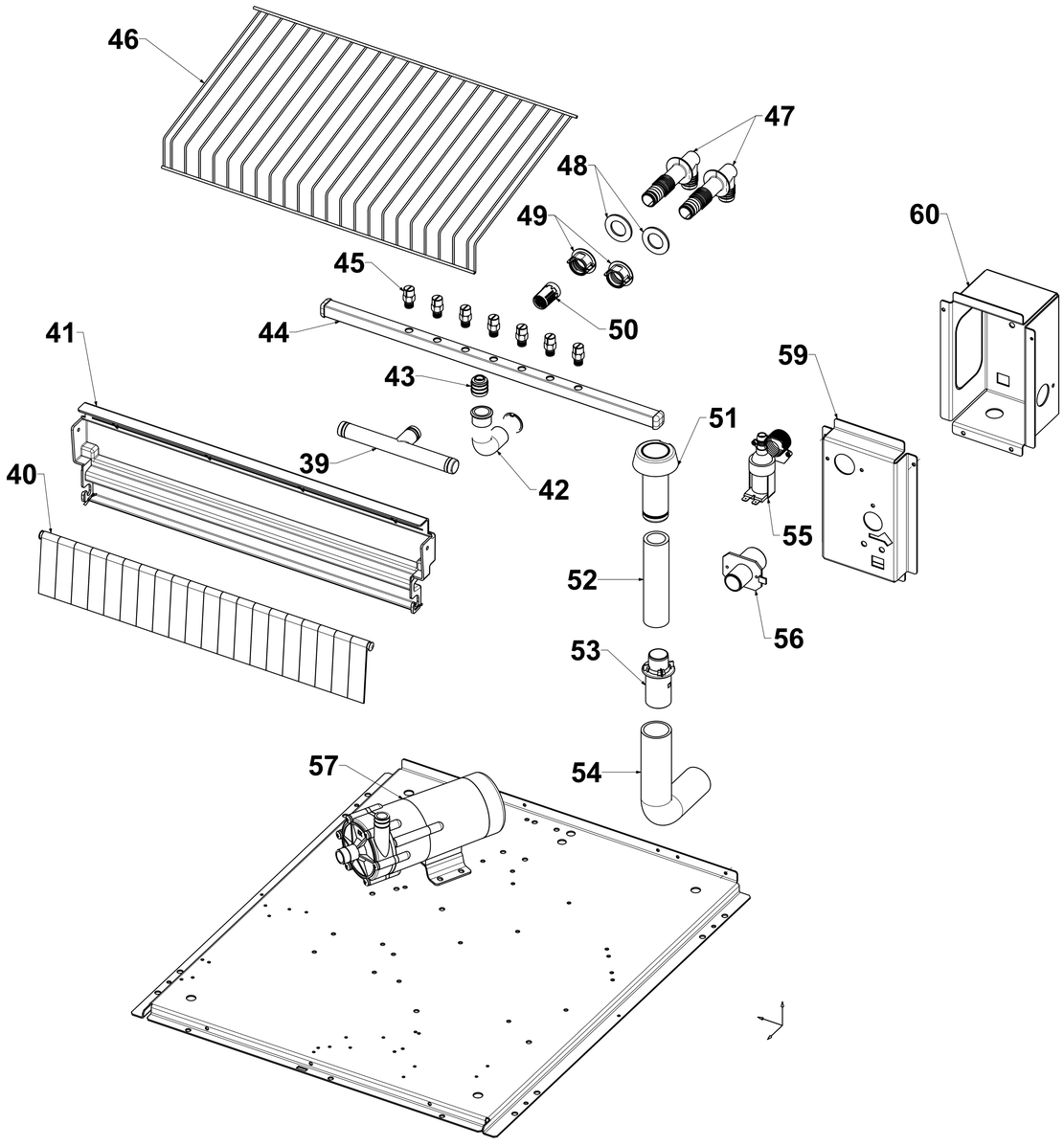


| PART NUMBER | FR25 | FR30 | FR35 | FR40 | FR50 | FR60 | FR70 | FR90 | Explanation |
|---|---|---|---|---|---|---|---|---|---|
| 39 | - | - | - | - | 1101910100 | 1101910100 | 1101910100 | 1101910100 | Plastic T Profile |
| 40 | 5500510100 | 5500510100 | 5500160100 | 5500160100 | 5500160100 | 5500160100 | 5500710100 | 5500710100 | Flags with Rod |
| 41 | 1101750100 | 1101750100 | 1100040100 | 1100040100 | 1100040100 | 1100040100 | 1101890100 | 1101890100 | Flags ABS Support |
| 42 | 1100840100 | 1100840100 | 1100840100 | 1100840100 | 1100840100 | 1100840100 | 1100840100 | 1100840100 | Water Inlet Elbow |
| 43 | 1102440100 | 1102440100 | 1102440100 | 1102440100 | 1102440100 | 1102440100 | 1102440100 | 1102440100 | Water Inlet Flare |
| 44 | 1102120100 | 1102120100 | 1100750100 | 1106390100 | 1102080100 | 1102080100 | 1102380100 | 1102380100 | Sprayers Bar |
| 45 | 1105960100 | 1105960100 | 1105960100 | 1100770100 | 1100770100 | 1100770100 | 1105960100 | 1105960100 | Sprayer |
| 46 | 1102070100 | 1102070100 | 1100220100 | 1100220100 | 1100220100 | 1100220100 | 1102410100 | 1102410100 | Ice Cubes Slide |
| 47 | 1100160100 | 1100160100 | 1100160100 | 1100160100 | 1100160100 | 1100160100 | 1100160100 | 1100160100 | Water Pump Adapter |
| 48 | 11100850100 | 1100850100 | 1100850100 | 1100850100 | 1100850100 | 1100850100 | 1100850100 | 1100850100 | Sealing Gasket |
| 49 | 1100170100 | 1100170100 | 1100170100 | 1100170100 | 1100170100 | 1100170100 | 1100170100 | 1100170100 | Water Pump Adapter Lock |
| 50 | 1100500100 | 1100500100 | 1100500100 | 1100500100 | 1100500100 | 1100500100 | 11005000100 | 1100500100 | Filter-Sprayers Bar Connection Pipe |
| 51 | 5500170100 | 5500170100 | 5500170100 | 5500170100 | 5500170100 | 5500170100 | 5501700100 | 5500170100 | Water Level Drain Plastic Group |
| 52 | 1101520200 | 1101520500 | 1101520100 | 1101520100 | 1101520300 | 1101520300 | 1100200400 | 1101520400 | Hose 1' |
| 53 | 1100190100 | 1100190100 | 1100190100 | 1100190100 | 1100190100 | 1100190100 | 1100190100 | 1100190100 | Water Outlet Plastic |
| 54 | 1101940200 | 1101940200 | 1101940200 | 1101940200 | 1101940200 | 1101940200 | 1101940100 | 1101940100 | Water Outlet Elbow |
| 55 | 1100560100 | 1100560100 | 1100560100 | 1100560100 | 1100560100 | 1100560100 | 1100560100 | 1100560100 | Water Inlet Valve |
| 56 | 1100860100 | 1100860100 | 1100860100 | 1100860100 | 1100860100 | 1100860100 | 1100860100 | 1100860100 | Water Flare |
| 57 | 1102190100 | 1102190100 | 1100600100 | 1100600100 | 1100600100 | 1100600100 | 1105930100 | 1105930100 | Water Pump |
| 59 | 1102190100 | 1106330100 | 1106330100 | 1106330100 | 1106330100 | 1106330100 | - | - | Hose Support |
| 60 | - | - | - | - | - | - | 1104420100 | 1104420100 | Hose Support FR70/FR90 |

# WATER DISTRIBUTION SYSTEM

frozy

Buz Makineleri | *Ice Makers*

*Rev02*

# ELECTRONIC CONTROLLER

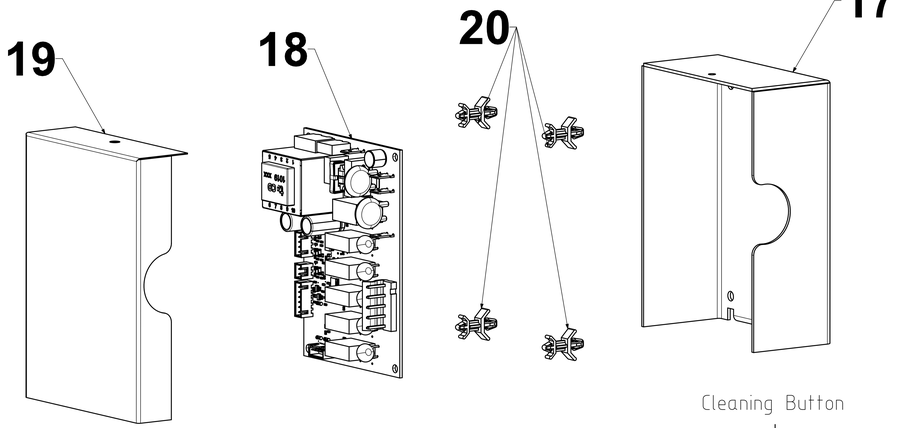


| PART NUMBER | FR25 | FR30 | FR35 | FR40 | FR50 | FR60 | FR70 | FR90 | Explanation |
|---|---|---|---|---|---|---|---|---|---|
| 8 | 1105950100 | 1105950100 | 1105950100 | 1105950100 | 1105950100 | 1105950100 | 1105950100 | 1105950100 | Cleaning Button |
| 9 | 1100480200 | 1100480200 | 1100480200 | 1100480200 | 1100480200 | 1100480200 | 1100480200 | 1100480200 | Power Switch |
| 17 | 1100080100 | 1100080100 | 1100080100 | 1100080100 | 1100080100 | 1100080100 | 1100080100 | 1100080100 | Card Assembly Box |
| 18 | 1105850101 | 1105850102 | 1105850103 | 1105850104 | 1105850105 | 1105850110 | 1105850201 | 1105850202 | Controller V2 |
| 19 | 1105440100 | 1105440100 | 1105440100 | 1105440100 | 1105440100 | 1105440100 | 1105440100 | 1105440100 | Card Cover Panel |
| 20 | 1106060100 | 1106060100 | 1106060100 | 1106060100 | 1106060100 | 1106060100 | 1106060100 | 1106060100 | Plastic Card Holder V2 |
| 21 | 1103010100 | 1103010100 | 1100460100 | 1100460100 | 1100460100 | 1100460100 | 1100460100 | 1100460100 | Probe Evaporator - Condenser |
| 22 | 1101490100 | 1101490100 | 1101490100 | 1101490100 | 1101490100 | 1101490100 | 1101490100 | 1101490100 | Probe Ice Bin |

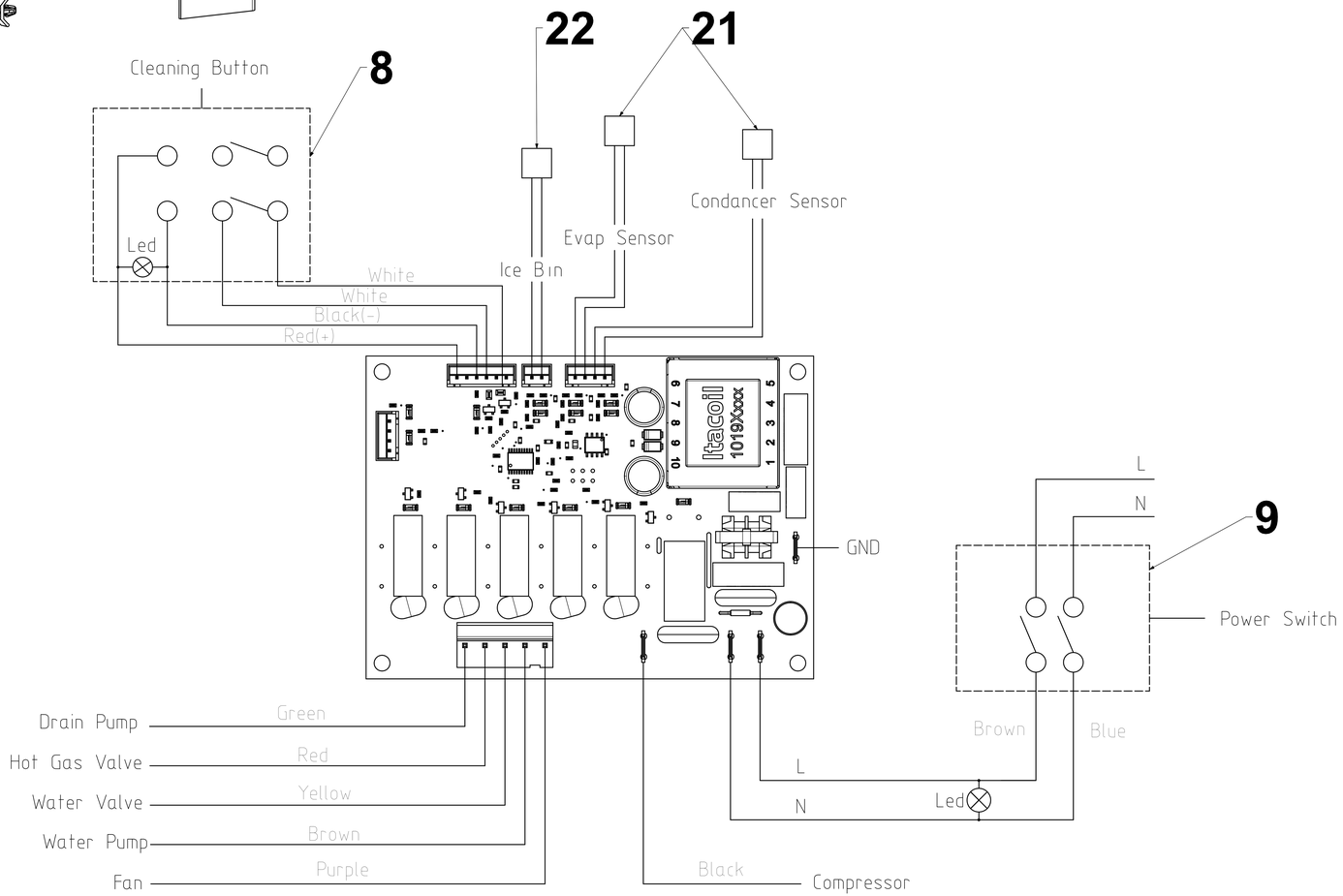


frozy

Buz Makineleri | *Ice Makers*

***Rev02***

# COOLING SYSTEM

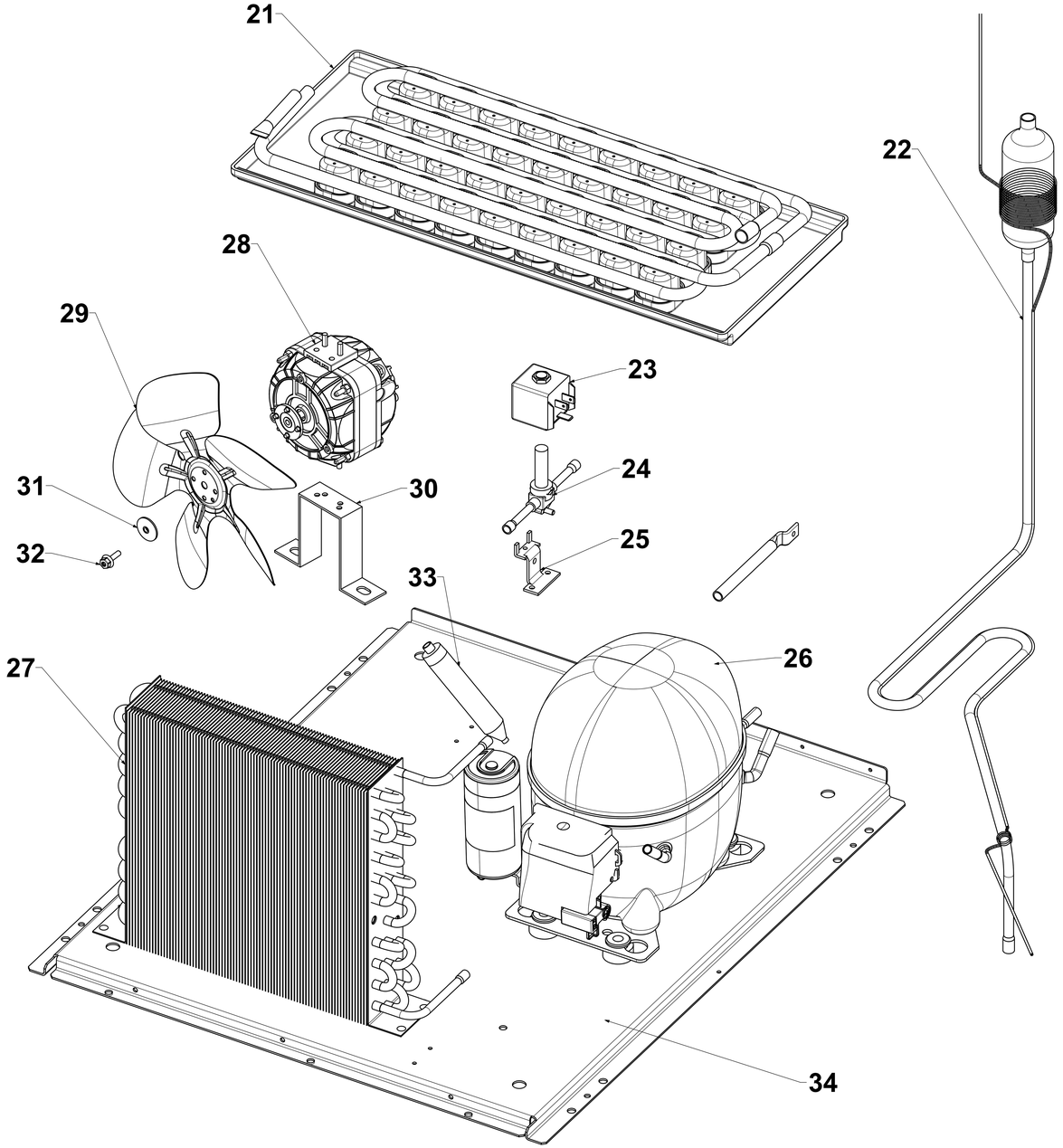


| PART NUMBER | FR25 | FR30 | FR35 | FR40 | FR50 | FR60 | FR70 | FR90 | Explanation |
|---|---|---|---|---|---|---|---|---|---|
| 21 | 5500540100 | 5500540100 | 5500200100 | 5501060100 | 5500360100 | 5500360100 | 5500640100 | 5500640100 | Coated Evaporator Group |
| 22 | 1102180100 | 1106250100 | 1103970100 | 1105980100 | 1101880100 | 1108420100 | 1102630100 | 1102710100 | Heat Exchanger |
| 23 | 1104400100 | 1104400100 | 1104400100 | 1104400100 | 1104400100 | 1104400100 | 1105850103 | 1105850103 | Hot Gas Valve Coil |
| 24 | 1104390100 | 1104390100 | 1104390100 | 1104390100 | 1104390100 | 1104390100 | 1104790100 | 1104790100 | Hot Gas Valve Body |
| 25 | 1102240100 | 1102240100 | 1102240100 | 1102240100 | 1102240100 | 1102240100 | 1102240100 | 1102240100 | Hot Gas Valve Bracket |
| 26 | 1104890100 | 1104920100 | 1100360100 | 1104920100 | 1101850100 | 1104970100 | 1104970100 | 1105010100 | Compressor |
| 27 | 1102150100 | 1106380100 | 1101130100 | 1103640100 | 1103640100 | 1103640100 | 1106240100 | 1107710100 | Condenser |
| 28 | 1106300100 | 1106300200 | 1106300200 | 1106300200 | 1106300200 | 1106300200 | 1106300300 | 1106300300 | Fan Motor |
| 29 | 1100380100 | 1100380100 | 1100380100 | 1100380100 | 1100380100 | 1100380100 | 1100380300 | 1100380300 | Sucking Fan |
| 30 | 1100740400 | - | - | - | - | - | - | - | Mounting Bracket Fan Mount |
| 31 | 1106730100 | 1106730100 | 1106730100 | 1106730100 | 1106730100 | 1106730100 | 1106730100 | 1106730100 | Fan Blade Assembly Flat Washer |
| 32 | 1106710100 | 1106710100 | 1106710100 | 1106710100 | 1106710100 | 1106710100 | 1106710100 | 1106710100 | Fan Blade Assembly Screw |
| 33 | 1100390100 | 1100390100 | 1100390100 | 1100390100 | 1100390100 | 1100390100 | 1102910100 | 1102910100 | Molecular Drier |
| 34 | 1102090100 | 1105240100 | 1104020100 | 1104020100 | 1104020100 | 1104020100 | 1102340100 | 1102910100 | Compressor Assembly Sheet |

frozy

Buz Makineleri | *Ice Makers*

***Rev02***

# DRAIN PUMP INSTALLATION

| PART NUMBER | FR25 | FR30 | FR35 | FR40 | FR50 | FR70 | FR90 | Explanation |
|---|---|---|---|---|---|---|---|---|
| **57** | 1100560100 | 1100560100 | 1100560100 | 1100560100 | 1100560100 | 1100560100 | 1100560100 | Water Inlet Valve |
| **60** | 1106330100 | 1106330100 | 1106330100 | 1106330100 | 1106330100 | - | - | Hose Support |
| **61** | - | - | - | - | - | 1104420100 | 1104420100 | Hose Support FR70-FR90 |
| **62** | - | 1103610100 | 1103610100 | 1103610100 | 1103610100 | 1103610100 | 1103610100 | Drain Pump |
| **63** | - | 1104450100 | 1104450100 | 1104450100 | 1104450100 | 1104450100 | 1104450100 | M6x10 Screw |
| **64** | - | 1105560100 | 1105560100 | 1105560100 | 1105560100 | 1105560100 | 1105560100 | Drain Pump Cable |

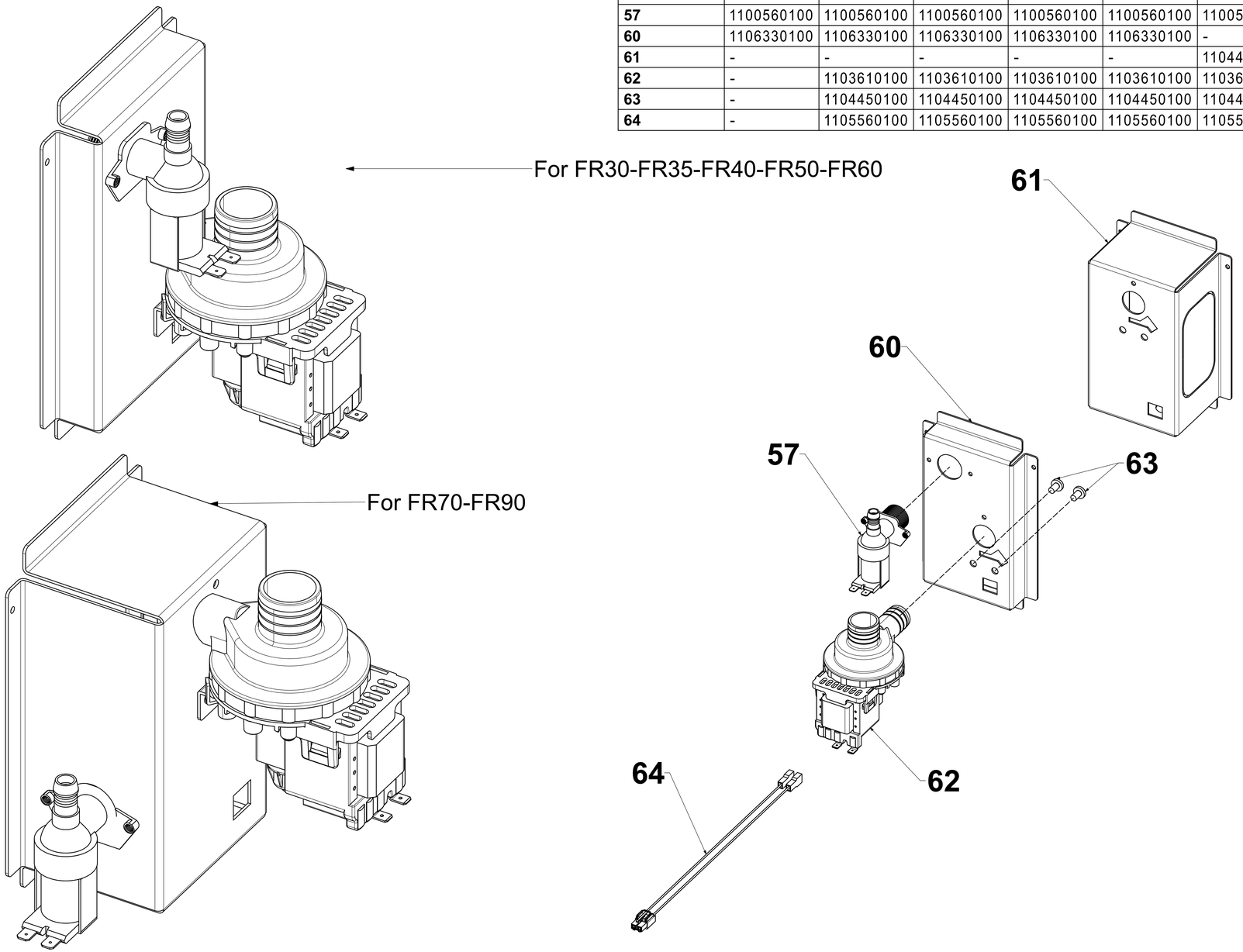


frozy

Buz Makineleri | *Ice Makers*